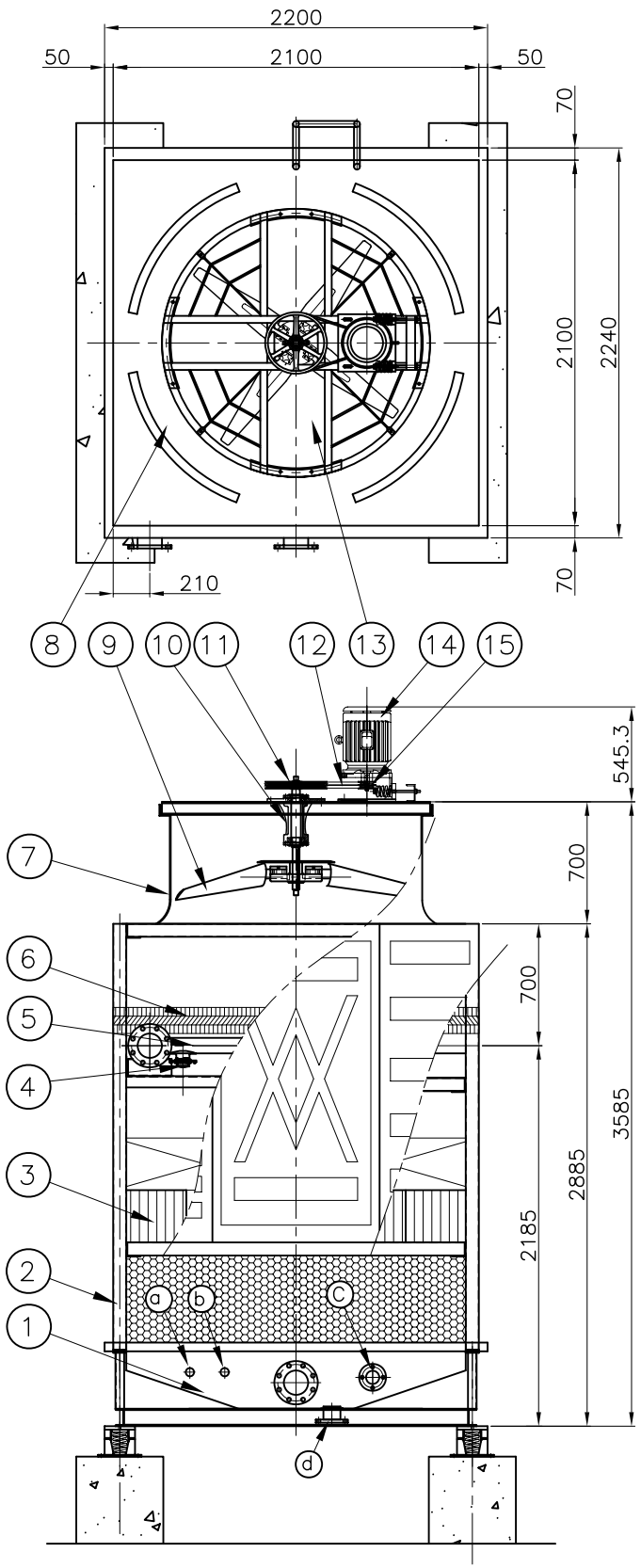

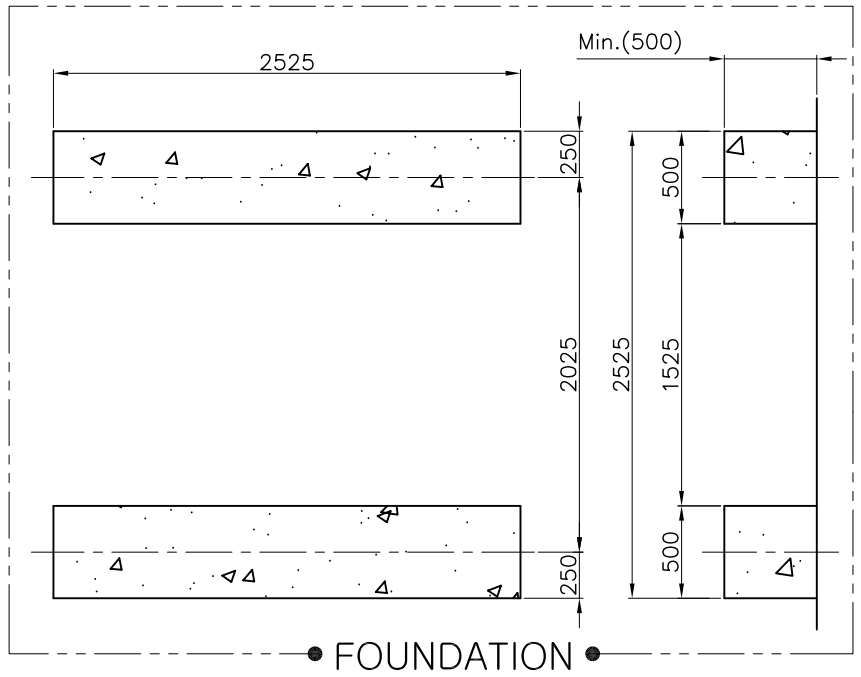

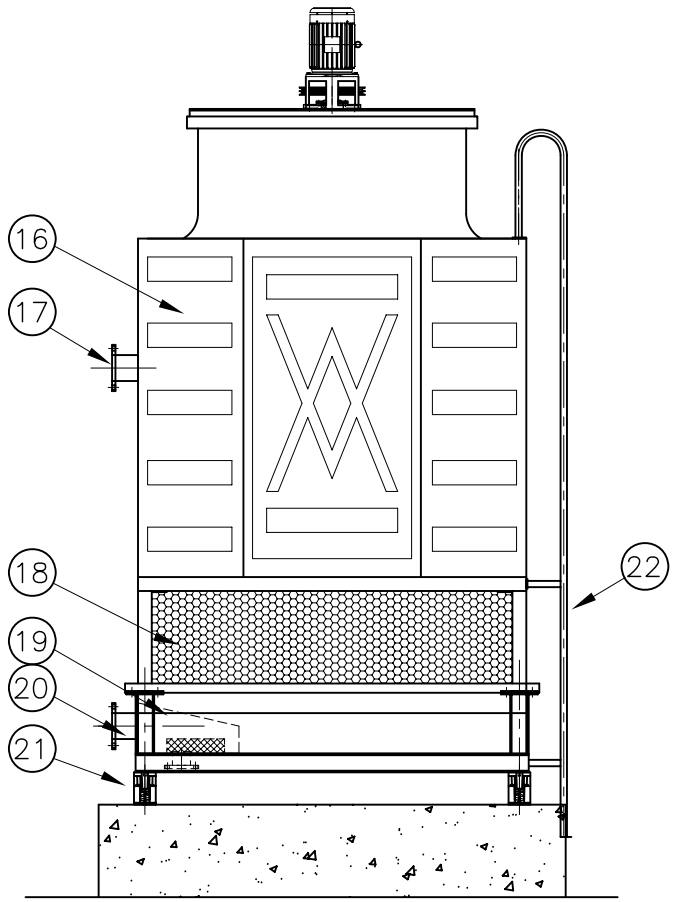

NO.	DESCRIPTIONS	MAT'L	IDENTIFICATION	Q'TY	REMARKS
1	COLD WATER BASIN	FRP	–	1 EA	
2	FRAMEWORK	SS400	75x75	1 EA	HDG
3	FILL	PVC	–	1 LOT	
4	WATER SPRAY NOZZLE	ABS	DK–B	9 EA	
5	LATERAL PIPE	PVC	75A	1 LOT	
6	DRIFT ELIMINATOR	PVC		1 LOT	
7	FAN CYLINDER	FRP	$\phi 1430\ ^{+10}_{-0}$	1 EA	
8	FAN DECK	FRP		1 EA	
9	FAN ASSEMBLY	AL–ALLOY	ø1400	1 SET	4 Blades
10	SPEED REDUCER	FC200	3HP	1 SET	
11	FAN DRIVE SHAFT PULLEY	FC200	1402B	1 EA	
12	V–BELT	RUBBER	BP56	2 EA	
13	MECH. EQUIPMENT BASE	SS400	–	1 EA	HDG
14	ELECTRIC MOTOR	TEFC	3HPx4P	1 EA	
15	MOTOR SHAFT PULLEY	FC200	402B	1 EA	
16	CASING	FRP		1 LOT	
17	INLET PIPE	PVC	125A	1 EA	
18	AIR INLET SCREEN	PVC	–	1 LOT	
19	ANTI VORTEX BOX	FRP	–	1 EA	HDG
20	OUTLET PIPE	SPP	125A	1 EA	HDG
21	FOUNDATION	RF CON'C	–	1 LOT	BY OWNER
22	LADDER	SPP	25A	1 EA	HDG

1. 상기 수량은 1 CELL에 대한 것임.
2. 본 기기와 연결되는 전선자재, 배관자재 및 공사는 공급범위에서 제외됨.
3. 기초 공사 제외.

DESIGN CONDITIONS			
WATER FLOW RATE		78	M^3/HR
NO. OF CELLS		1	CELL
TEMP.	INLET	37	°C
	OUTLET	32	°C
	WET BULB	27	°C

NOZZLE SPECIFICATIONS					
SYMBOL	DESCRIPTIONS	MAT'L	SIZE	Q'TY	REMARK
a	MANUAL MAKE–UP	SPP	40 A	1 EA	SCOKET
b	AUTO. MAKE–UP	SPP	40 A	1 EA	SCOKET
c	OVERFLOW	SPP	50 A	1 EA	FLANGE
d	DRAIN	SPP	80 A	1 EA	FLANGE

NO.	DATE	REVISIONS	REVIEWED	CHECKED	APPROVED
1					
2					

NO.	DESCRIPTIONS	MAT'L	SIZE	Q'TY	REMARKS

DAEIL AQUA CO.,LTD.
COOLING TOWER (주) 대 일 아 쿠 아

TITLE: OUTLINE DIMENSIONAL & FOUNDATION (100 CT)

PROJECTION

DWG.	DSN.	CHK.	APPR.	SCALE	1 / 40	PROJECT	
S.C.I.	S.S.H.	J.J.M.	R.H.H.	UNIT	mm	REF. NO.	
				DATE		DWG. NO.	DI–LCP–100–01

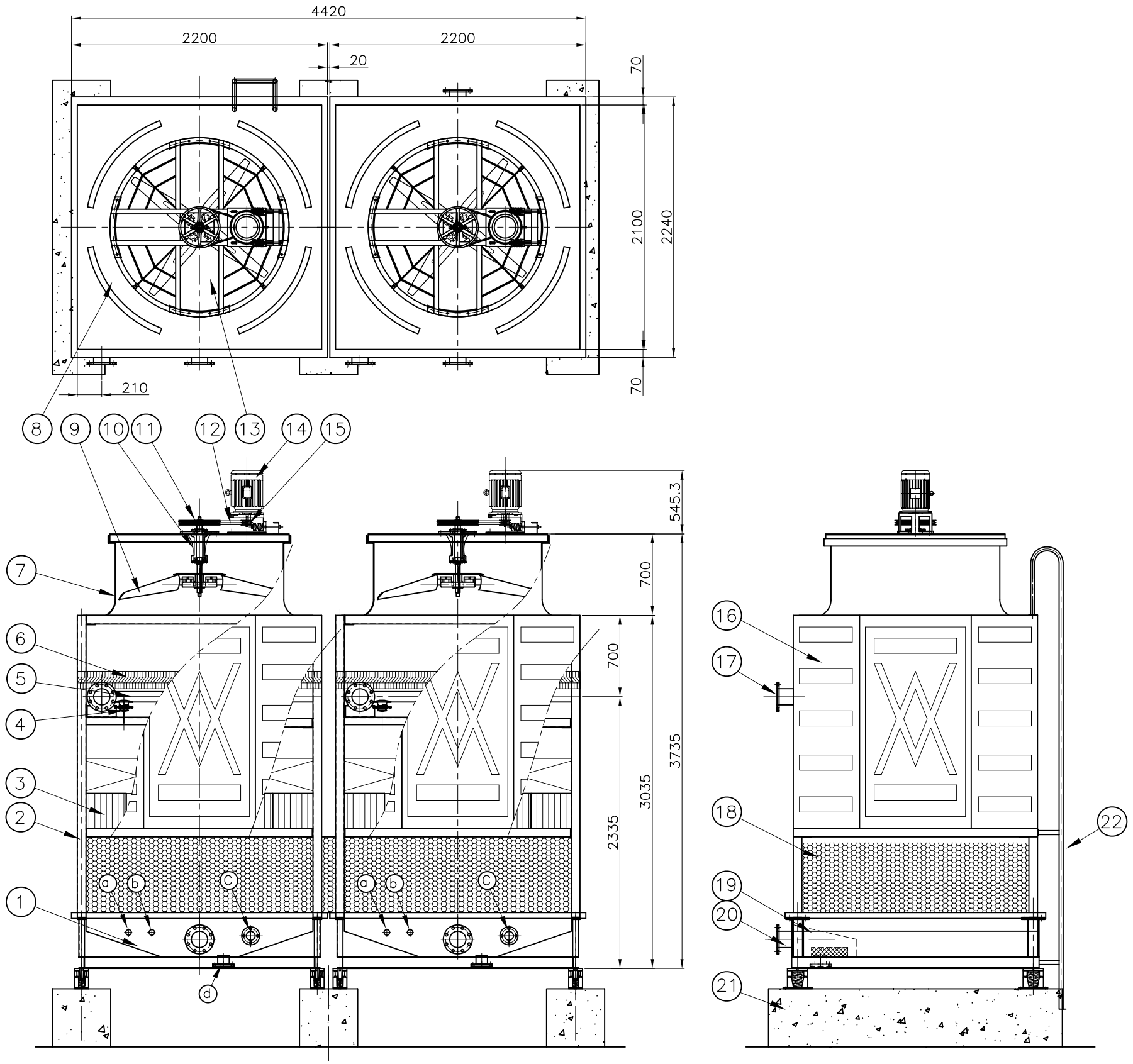

NO.	DESCRIPTIONS	MAT'L	IDENTIFICATION	Q'TY	REMARKS
1	COLD WATER BASIN	FRP	–	1 EA	
2	FRAMEWORK	SS400	75x75	1 EA	HDG
3	FILL	PVC	–	1 LOT	
4	WATER SPRAY NOZZLE	ABS	DK–B	9 EA	
5	LATERAL PIPE	PVC	75A	1 LOT	
6	DRIFT ELIMINATOR	PVC		1 LOT	
7	FAN CYLINDER	FRP	$\phi 1430\ ^{+10}_{-0}$	1 EA	
8	FAN DECK	FRP		1 EA	
9	FAN ASSEMBLY	AL–ALLOY	ø1400	1 SET	4 Blades
10	SPEED REDUCER	FC200	3HP	1 SET	
11	FAN DRIVE SHAFT PULLEY	FC200	1202B	1 EA	
12	V–BELT	RUBBER	BP59	2 EA	
13	MECH. EQUIPMENT BASE	SS400	–	1 EA	HDG
14	ELECTRIC MOTOR	TEFC	3HPx4P	1 EA	
15	MOTOR SHAFT PULLEY	FC200	452B	1 EA	
16	CASING	FRP		1 LOT	
17	INLET PIPE	PVC	125A	1 EA	
18	AIR INLET SCREEN	PVC	–	1 LOT	
19	ANTI VORTEX BOX	FRP	–	1 EA	HDG
20	OUTLET PIPE	SPP	125A	1 EA	HDG
21	FOUNDATION	RF CON'C	–	1 LOT	BY OWNER
22	LADDER	SPP	25A	1 EA	HDG

1. 상기 수량은 1 CELL에 대한 것임.
2. 본 기기와 연결되는 전선자재, 배관자재 및 공사는 공급범위에서 제외됨.
3. 기초 공사 제외.

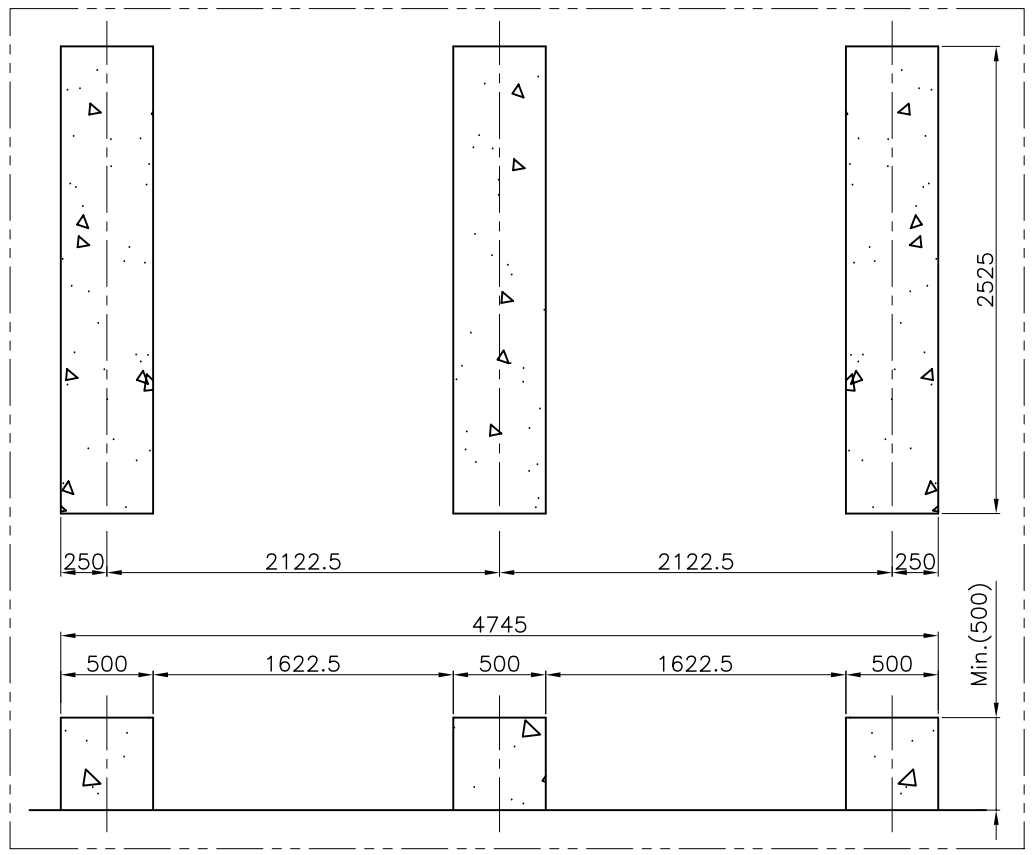

DESIGN CONDITIONS			
WATER FLOW RATE		156	M^3/HR
NO. OF CELLS		2	CELL
TEMP.	INLET	37	°C
	OUTLET	32	°C
	WET BULB	27	°C

NOZZLE SPECIFICATIONS					
SYMBOL	DESCRIPTIONS	MAT'L	SIZE	Q'TY	REMARK
a	MANUAL MAKE–UP	SPP	40 A	2 EA	SCOKET
b	AUTO. MAKE–UP	SPP	40 A	2 EA	SCOKET
c	OVERFLOW	SPP	50 A	2 EA	FLANGE
d	DRAIN	SPP	80 A	2 EA	FLANGE

NO.	DATE	REVISIONS	REVIEWED	CHECKED	APPROVED
1					
0					

NO.	DESCRIPTIONS	MAT'L	SIZE	Q'TY	REMARKS

DAEIL AQUA CO.,LTD.
COOLING TOWER (주) 대 일 아 쿠 아

TITLE ASSEMBLY & FOUNDATION (100 CT x 2 CELLS)

PROJECTION

DWG.	DSN.	CHK.	APPR.	SCALE	1 / 40	PROJECT	
S.C.I.	S.S.H.	J.J.M.	R.H.H.	UNIT	mm	REF. NO.	
				DATE		DWG. NO.	DI–LCP–100–2–01

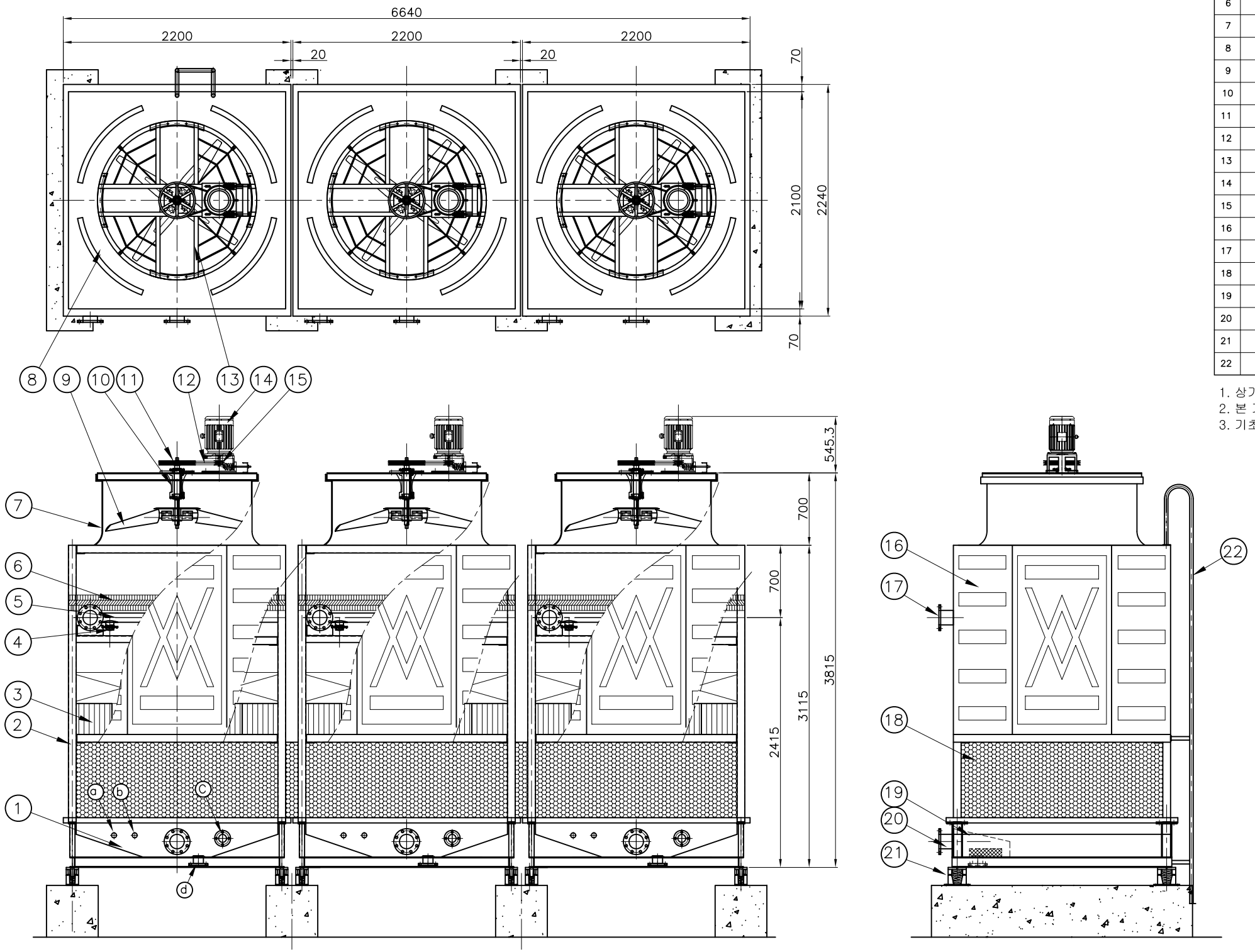

NO.	DESCRIPTIONS	MAT'L	IDENTIFICATION	Q'TY	REMARKS
1	COLD WATER BASIN	FRP	–	1 EA	
2	FRAMEWORK	SS400	75x75	1 EA	HDG
3	FILL	PVC	–	1 LOT	
4	WATER SPRAY NOZZLE	ABS	DK–B	9 EA	
5	LATERAL PIPE	PVC	75A	1 LOT	
6	DRIFT ELIMINATOR	PVC		1 LOT	
7	FAN CYLINDER	FRP	$\phi 1430\ ^{+10}_{-0}$	1 EA	
8	FAN DECK	FRP		1 EA	
9	FAN ASSEMBLY	AL–ALLOY	ø1400	1 SET	4 Blades
10	SPEED REDUCER	FC200	3HP	1 SET	
11	FAN DRIVE SHAFT PULLEY	FC200	1202B	1 EA	
12	V–BELT	RUBBER	BP59	2 EA	
13	MECH. EQUIPMENT BASE	SS400	–	1 EA	HDG
14	ELECTRIC MOTOR	TEFC	3HPx4P	1 EA	
15	MOTOR SHAFT PULLEY	FC200	452B	1 EA	
16	CASING	FRP		1 LOT	
17	INLET PIPE	PVC	125A	1 EA	
18	AIR INLET SCREEN	PVC	–	1 LOT	
19	ANTI VORTEX BOX	FRP	–	1 EA	HDG
20	OUTLET PIPE	SPP	125A	1 EA	HDG
21	FOUNDATION	RF CON'C	–	1 LOT	BY OWNER
22	LADDER	SPP	25A	1 EA	HDG

1. 상기 수량은 1 CELL에 대한 것임.
2. 본 기기와 연결되는 전선자재, 배관자재 및 공사는 공급범위에서 제외됨.
3. 기초 공사 제외.

DESIGN CONDITIONS			
WATER FLOW RATE		234	M^3/HR
NO. OF CELLS		3	CELL
TEMP.	INLET	37	°C
	OUTLET	32	°C
	WET BULB	27	°C

NOZZLE SPECIFICATIONS					
SYMBOL	DESCRIPTIONS	MAT'L	SIZE	Q'TY	REMARK
a	MANUAL MAKE–UP	SPP	40 A	3 EA	SCOKET
b	AUTO. MAKE–UP	SPP	40 A	3 EA	SCOKET
c	OVERFLOW	SPP	50 A	3 EA	FLANGE
d	DRAIN	SPP	80 A	3 EA	FLANGE

NO.	DATE	REVISIONS	REVIEWED	CHECKED	APPROVED
1					
2					

NO.	DESCRIPTIONS	MAT'L	SIZE	Q'TY	REMARKS

DAEIL AQUA CO.,LTD.
COOLING TOWER (주) 대 일 아 쿠 아

TITLE ASSEMBLY DRAWING (100 CT x 3 CELLS)

PROJECTION

DWG.	DSN.	CHK.	APPR.	SCALE	1 / 45	PROJECT	
S.C.I.	S.S.H.	J.J.M.	R.H.H.	UNIT	mm	REF. NO.	
				DATE		DWG. NO.	DI–LCP–100–3–01

NO.	DESCRIPTIONS	MAT'L	SIZE	Q'TY	REMARKS

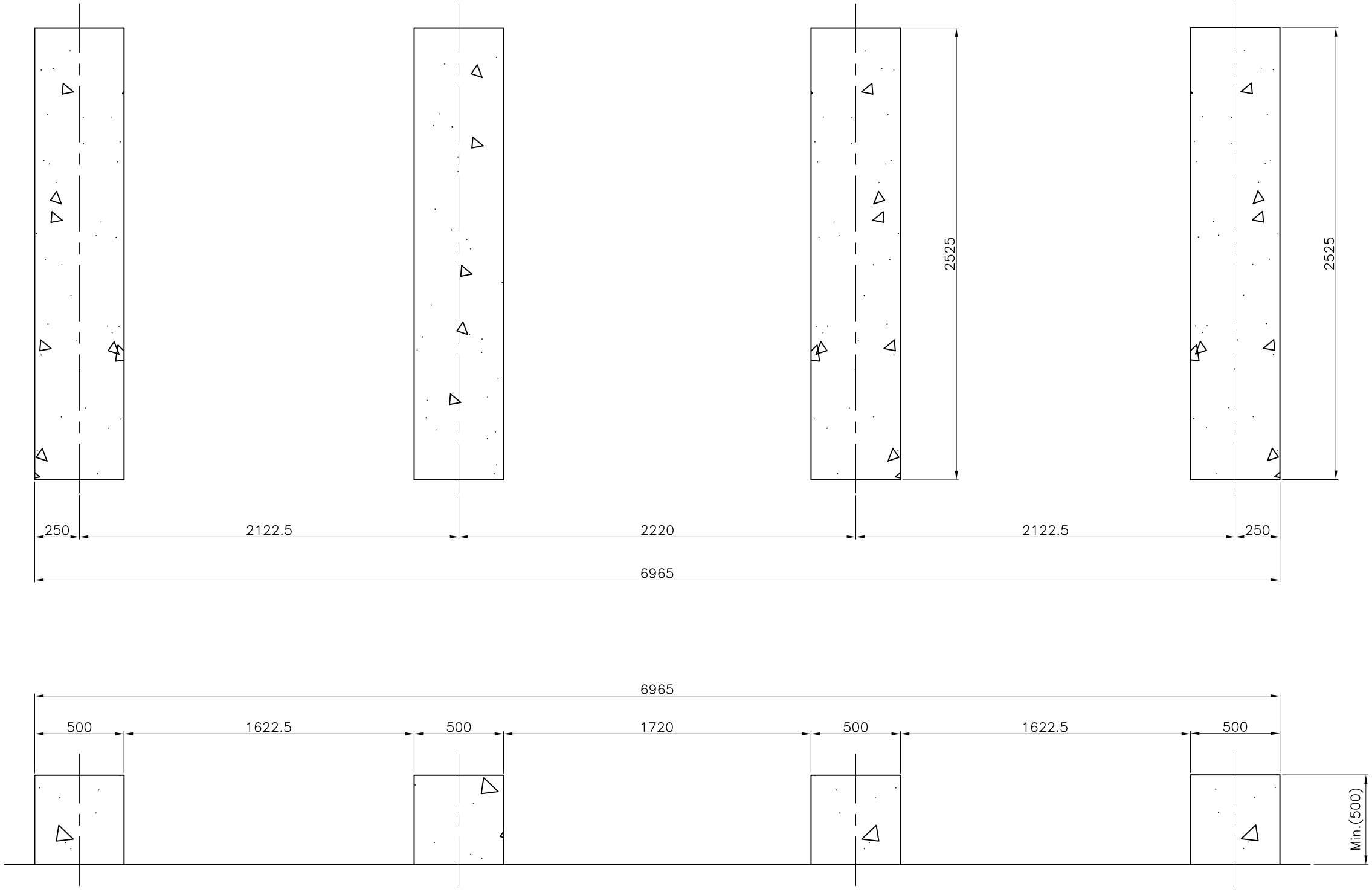

NO.	DATE	REVISIONS	REVIEWED	CHECKED	APPROVED
2					
1					

NO.	DESCRIPTIONS	MAT'L	SIZE	Q'TY	REMARKS

DAEIL AQUA CO., LTD.
COOLING TOWER (주) 대 일 아 쿠 아

TITLE FOUNDATION (100 CT x 3 CELLS)

PROJECTION

DWG.	DSN.	CHK.	APPR.	SCALE	1 / 25	P.J.T NAME		REV.NO.
S.C.I.	S.S.H.	J.J.M.	R.H.H.	UNIT	mm	REF. NO.		0
				DATE		DWG. NO.	DI-LCP-100-3-02	

NO.	DESCRIPTIONS	MAT'L	IDENTIFICATION	Q'TY	REMARKS
1	COLD WATER BASIN	FRP	–	1 EA	
2	FRAMEWORK	SS400	75x75	1 EA	HDG
3	FILL	PVC	–	1 LOT	
4	WATER SPRAY NOZZLE	ABS	DK–B	9 EA	
5	LATERAL PIPE	PVC	75A	1 LOT	
6	DRIFT ELIMINATOR	PVC		1 LOT	
7	FAN CYLINDER	FRP	$\phi 1430\ ^{+10}_{-0}$	1 EA	
8	FAN DECK	FRP		1 EA	
9	FAN ASSEMBLY	AL–ALLOY	ø1400	1 SET	4 Blades
10	SPEED REDUCER	FC200	3HP	1 SET	
11	FAN DRIVE SHAFT PULLEY	FC200	1202B	1 EA	
12	V–BELT	RUBBER	BP59	2 EA	
13	MECH. EQUIPMENT BASE	SS400	–	1 EA	HDG
14	ELECTRIC MOTOR	TEFC	3HPx4P	1 EA	
15	MOTOR SHAFT PULLEY	FC200	452B	1 EA	
16	CASING	FRP		1 LOT	
17	INLET PIPE	PVC	125A	1 EA	
18	AIR INLET SCREEN	PVC	–	1 LOT	
19	ANTI VORTEX BOX	FRP	–	1 EA	HDG
20	OUTLET PIPE	SPP	125A	1 EA	HDG
21	FOUNDATION	RF CON'C	–	1 LOT	BY OWNER
22	LADDER	SPP	25A	1 EA	HDG

1. 상기 수량은 1 CELL에 대한 것임.
2. 본 기기와 연결되는 전선자재, 배관자재 및 공사는 공급범위에서 제외됨.
3. 기초 공사 제외.

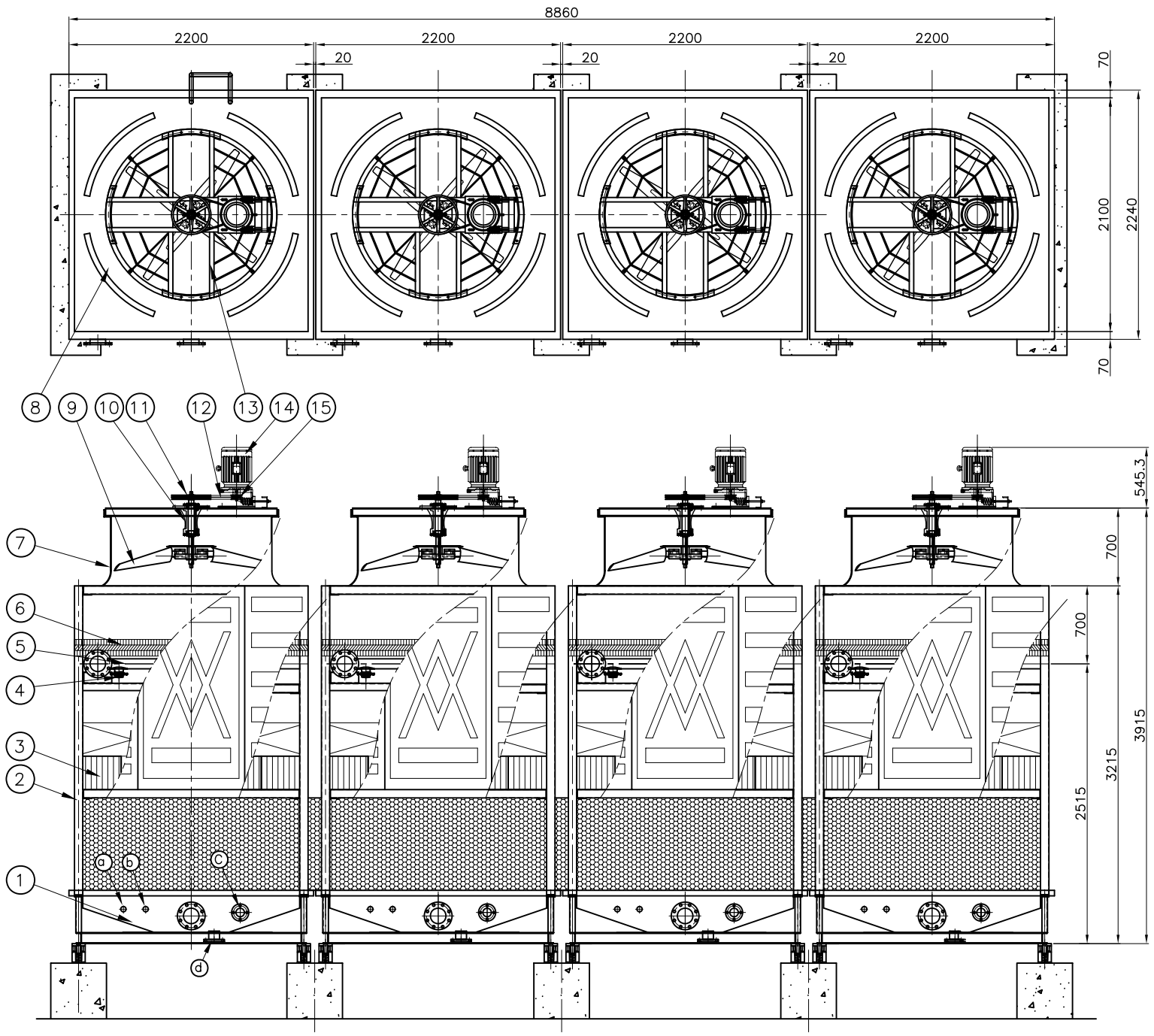

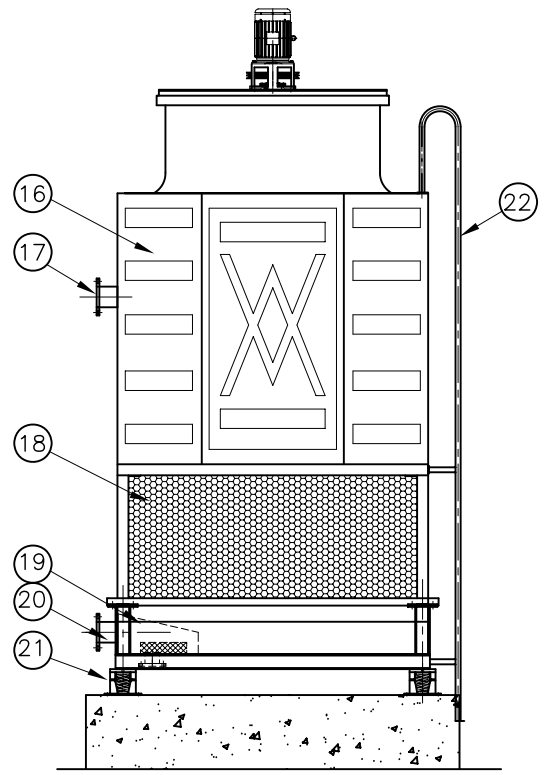

DESIGN CONDITIONS			
WATER FLOW RATE		312	M^3/HR
NO. OF CELLS		4	CELL
TEMP.	INLET	37	°C
	OUTLET	32	°C
	WET BULB	27	°C

NOZZLE SPECIFICATIONS					
SYMBOL	DESCRIPTIONS	MAT'L	SIZE	Q'TY	REMARK
a	MANUAL MAKE–UP	SPP	40 A	4 EA	SCOKET
b	AUTO. MAKE–UP	SPP	40 A	4 EA	SCOKET
c	OVERFLOW	SPP	50 A	4 EA	FLANGE
d	DRAIN	SPP	80 A	4 EA	FLANGE

NO.	DATE	REVISIONS	REVIEWED	CHECKED	APPROVED
1					
2					

NO.	DESCRIPTIONS	MAT'L	SIZE	Q'TY	REMARKS

DAEIL AQUA CO.,LTD.
COOLING TOWER (주) 대 일 아 쿠 아

TITLE ASSEMBLY DRAWING (100 CT x 4 CELLS)

PROJECTION

DWG.	DSN.	CHK.	APPR.	SCALE	1 / 50	PROJECT	
S.C.I.	S.S.H.	J.J.M.	R.H.H.	UNIT	mm	REF. NO.	
				DATE		DWG. NO.	DI–LCP–100–4–01

NO.	DESCRIPTIONS	MAT'L	SIZE	Q'TY	REMARKS

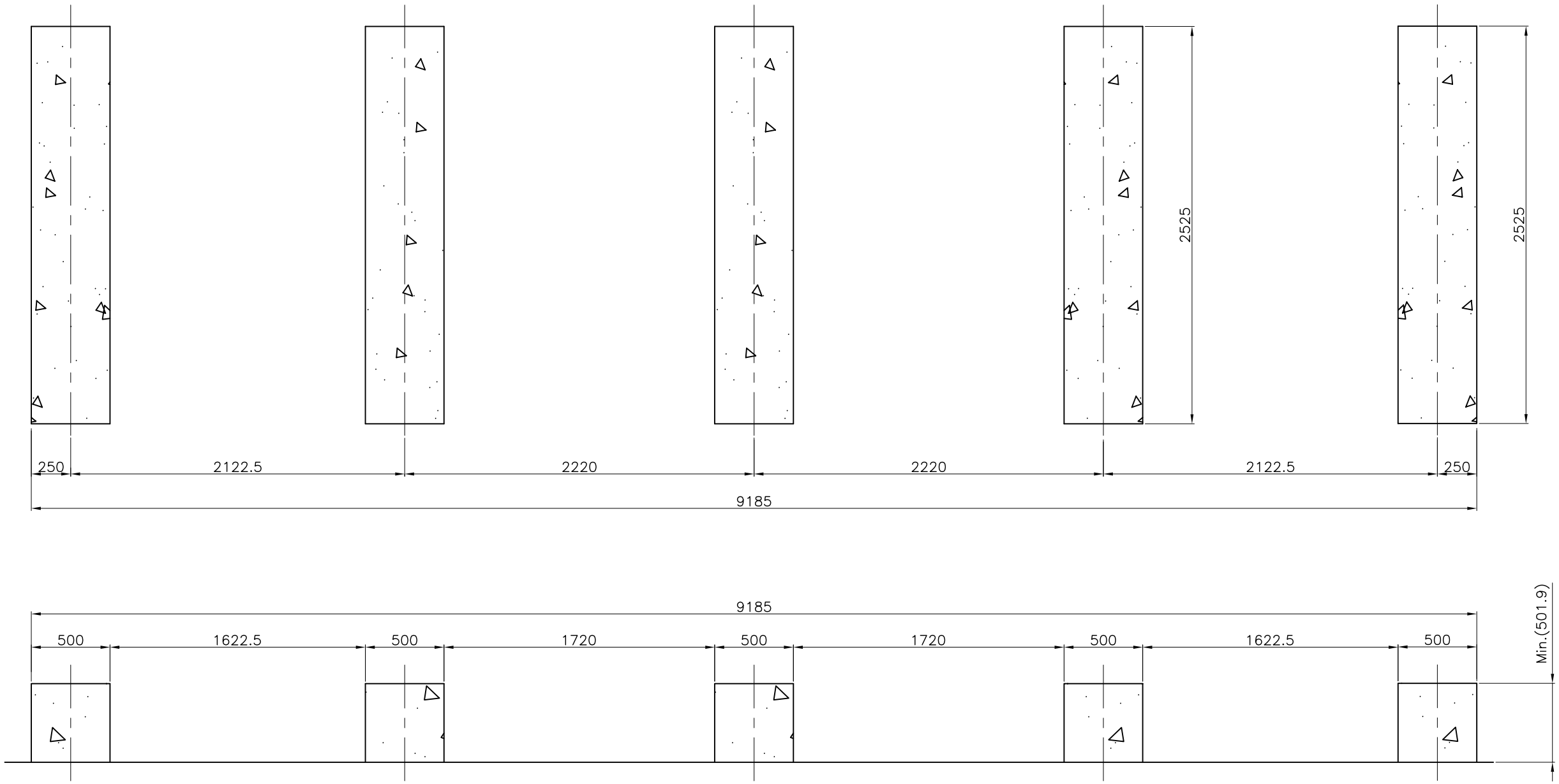

NO.	DATE	REVISIONS	REVIEWED	CHECKED	APPROVED
2					
1					

NO.	DESCRIPTIONS	MAT'L	SIZE	Q'TY	REMARKS

DAEIL AQUA CO., LTD.
COOLING TOWER (주) 대 일 아 쿠 아

TITLE FOUNDATION
(100 CT x 4 CELLS)

PROJECTION

DWG.	DSN.	CHK.	APPR.	SCALE	1 / 30	P.J.T NAME		REV.NO.
S.C.I.	S.S.H.	J.J.M.	R.H.H.	UNIT	mm	REF. NO.		0
				DATE		DWG. NO.	DI-LCP-100-4-02	

NO.	DESCRIPTIONS	MAT'L	IDENTIFICATION	Q'TY	REMARKS
1	COLD WATER BASIN	FRP	–	1 EA	
2	FRAMEWORK	SS400	75x75	1 EA	HDG
3	FILL	PVC	–	1 LOT	
4	WATER SPRAY NOZZLE	ABS	DK–B	9 EA	
5	LATERAL PIPE	PVC	75A	1 LOT	
6	DRIFT ELIMINATOR	PVC		1 LOT	
7	FAN CYLINDER	FRP	$\phi 1430\ ^{+10}_{-0}$	1 EA	
8	FAN DECK	FRP		1 EA	
9	FAN ASSEMBLY	AL–ALLOY	ø1400	1 SET	4 Blades
10	SPEED REDUCER	FC200	3HP	1 SET	
11	FAN DRIVE SHAFT PULLEY	FC200	1202B	1 EA	
12	V–BELT	RUBBER	BP59	2 EA	
13	MECH. EQUIPMENT BASE	SS400	–	1 EA	HDG
14	ELECTRIC MOTOR	TEFC	3HPx4P	1 EA	
15	MOTOR SHAFT PULLEY	FC200	452B	1 EA	
16	CASING	FRP		1 LOT	
17	INLET PIPE	PVC	125A	1 EA	
18	AIR INLET SCREEN	PVC	–	1 LOT	
19	ANTI VORTEX BOX	FRP	–	1 EA	HDG
20	OUTLET PIPE	SPP	125A	1 EA	HDG
21	FOUNDATION	RF CON'C	–	1 LOT	BY OWNER
22	LADDER	SPP	25A	1 EA	HDG

1. 상기 수량은 1 CELL에 대한 것임.
2. 본 기기와 연결되는 전선자재, 배관자재 및 공사는 공급범위에서 제외됨.
3. 기초 공사 제외.

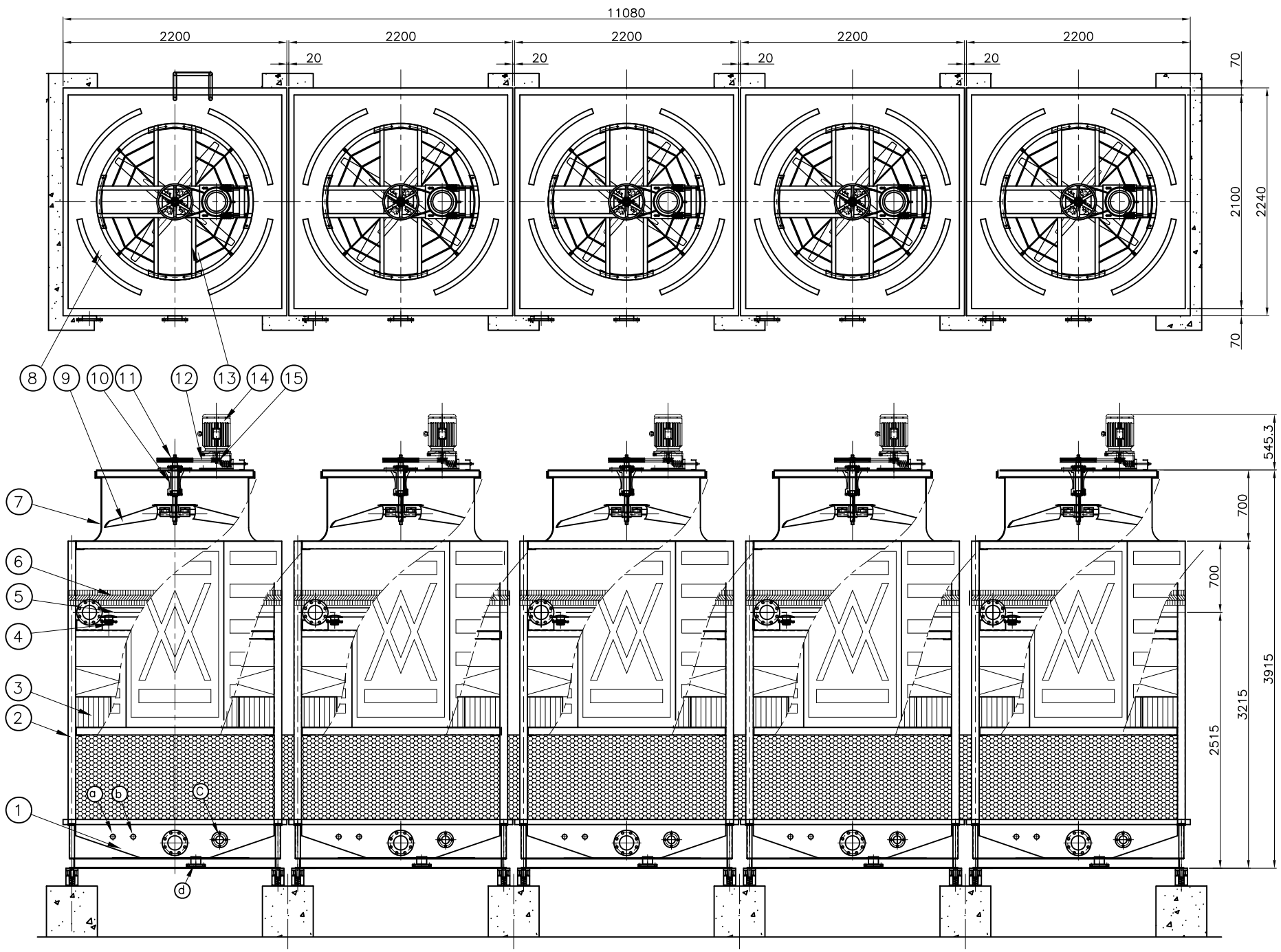

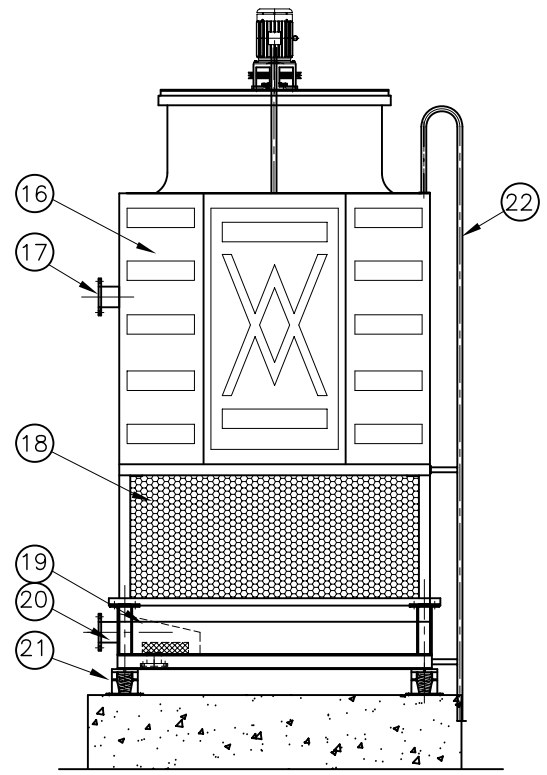

DESIGN CONDITIONS			
WATER FLOW RATE		390	M^3/HR
NO. OF CELLS		5	CELL
TEMP.	INLET	37	°C
	OUTLET	32	°C
	WET BULB	27	°C

NOZZLE SPECIFICATIONS					
SYMBOL	DESCRIPTIONS	MAT'L	SIZE	Q'TY	REMARK
a	MANUAL MAKE–UP	SPP	40 A	5 EA	SCOKET
b	AUTO. MAKE–UP	SPP	40 A	5 EA	SCOKET
c	OVERFLOW	SPP	50 A	5 EA	FLANGE
d	DRAIN	SPP	80 A	5 EA	FLANGE

NO.	DATE	REVISIONS	REVIEWED	CHECKED	APPROVED
1					
2					

NO.	DESCRIPTIONS	MAT'L	SIZE	Q'TY	REMARKS

DAEIL AQUA CO.,LTD.
COOLING TOWER (주) 대 일 아 쿠 아

TITLE ASSEMBLY DRAWING (100 CT x 5 CELLS)

PROJECTION

DWG.	DSN.	CHK.	APPR.	SCALE	1 / 50	PROJECT	
S.C.I.	S.S.H.	J.J.M.	R.H.H.	UNIT	mm	REF. NO.	
				DATE		DWG. NO.	DI–LCP–100–5–01

NO.	DESCRIPTIONS	MAT'L	SIZE	Q'TY	REMARKS

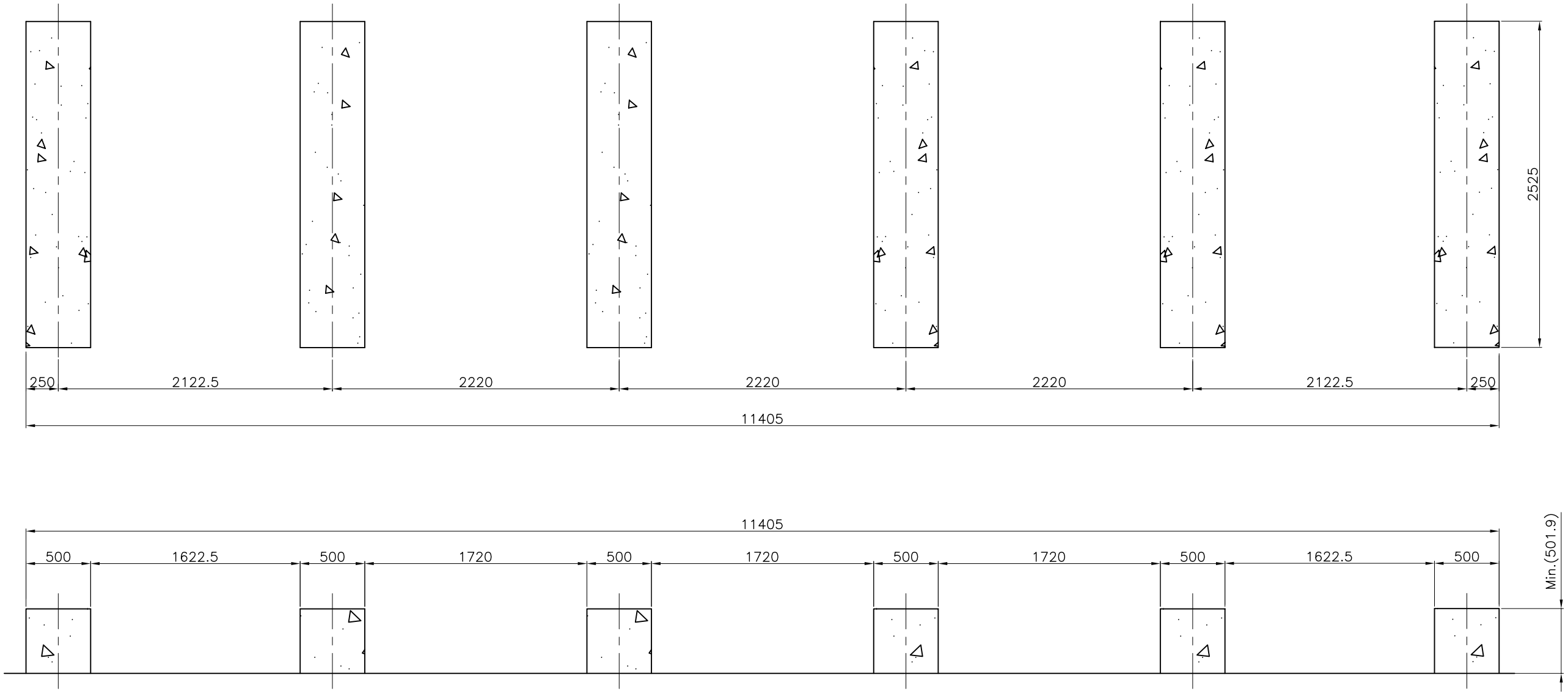

NO.	DATE	REVISIONS	REVIEWED	CHECKED	APPROVED
2					
1					

NO.	DESCRIPTIONS	MAT'L	SIZE	Q'TY	REMARKS

DAEIL AQUA CO., LTD.
COOLING TOWER (주) 대 일 아 쿠 아

TITLE FOUNDATION
(100 CT x 5 CELLS)

PROJECTION

DWG.	DSN.	CHK.	APPR.	SCALE	1 / 35	P.J.T NAME		REV.NO.
S.C.I.	S.S.H.	J.J.M.	R.H.H.	UNIT	mm	REF. NO.		0
				DATE		DWG. NO.	DI-LCP-100-5-02	